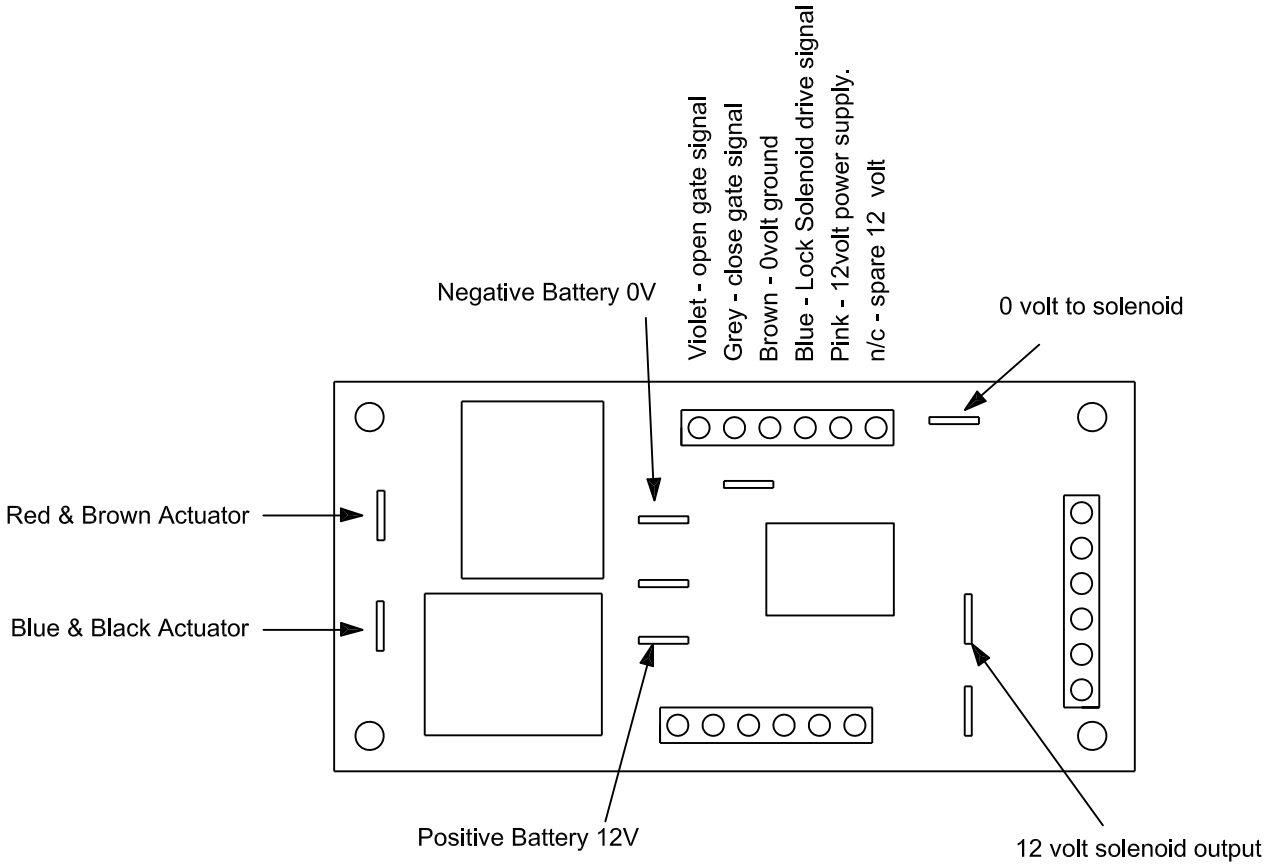

	Scale	
Hollin Applications 'The Station' Wolsingham, Co. Durham. DL13 3BL Tel. 01388 529000	J.Proud 3 Mar 09	
Title Gate Battery Box Relay Circuit	Dwg. No. HOL4-DWG2-039	